ROBOWRANGLERS

RENEGADE

Who We Are

SENIORS: Stefanie, Kelsey, Aaron, Rachel, Kritika, Caleb, William P, Andrew

JUNIORS: Martin, Kaden, Kolton, Hunter, Jordan, Logan

SOPHOMORES: Will A, Coleman, Zachary, Hannah, Breanna, Kaylea, Gavin, Ethan K, Madison, Carlos, Nick, Austin, Aidan, Katie

FRESHMEN: Alex, Yeonsoo, Ethan M, Brett, Aiden, Reese, Kacie

MENTORS: Adrienne, George, Colin, Linda, Corey, Grant, Art, Dillon, Katie, Jessi, Adam R, James, Ricky T, Jay, JVN, Kevin, Hank, David E, John H, Eric, Justin, Monty, Adam F, Ricky Q

CONTINUOUSLY ITERATING SINCE

1992

GREENVILLE, TX

ORIGINAL FRC CHARTER TEAM

MENTOR 28 VEX TEAMS

1993 & 2008 FRC CHAMPIONS

36 STUDENTS, 24 MENTORS

LEAD:

PEOPLE OF ALL INTERESTS

COMMUNITY MEMBERS

YOUNGER STUDENTS

TO **STEM**

USING:

FRC DEMONSTRATIONS

VEX REGIONALS

VEX & VEX IQ MENTORING

FIVE

ROBOWRANGLER ALUMNI HAVE HAVE BROUGHT THEIR EXPERIENCE FULL CIRCLE BY BECOMING MENTORS

100% OF SENIORS IN THE PAST 5 YEARS ATTENDED COLLEGE

EXPANDED

DISTRICT ROBOTICS PARTICIPATION

FROM 29 TO 453 STUDENTS IN 5 YEARS

LAST YEAR, WE HELPED PASS A $79 MILLION BOND FOR OUR DISTRICT

China Robotics Competition 2015

In the Summer of 2015, our team had the privilege of traveling to China to compete in the Second Annual China Robotics Competition, presented by the China Urban Youth Robotic League (CUYRA). During this two week period, we were given the opportunity to sightsee, strengthen bonds with fellow FRC teams from the United States, and also made great new friends on newly started Chinese teams.

After arriving in China, we spent the first week of our trip sightseeing. During this time, we floated on a raft down the Guilin River, toured the city of Shenzhen, and also helped a multitude of rookie teams in the Chinese province of Guangdong. We, along with the other US teams, met these rookies at their school, and taught them the ins and outs of building a robot.

After helping the rookie teams build their robots, we all competed at the CRC offseason event, which we were fortunate enough to win with our good friends Team 987, the High Rollers from Las Vegas, and one of the rookie teams we had helped just days before!

The entire trip was a whirlwind experience that none of us who attended will ever forget, we are eternally grateful for the experience, and are looking forward to competing in Shanghai, China again in the Summer of 2016.

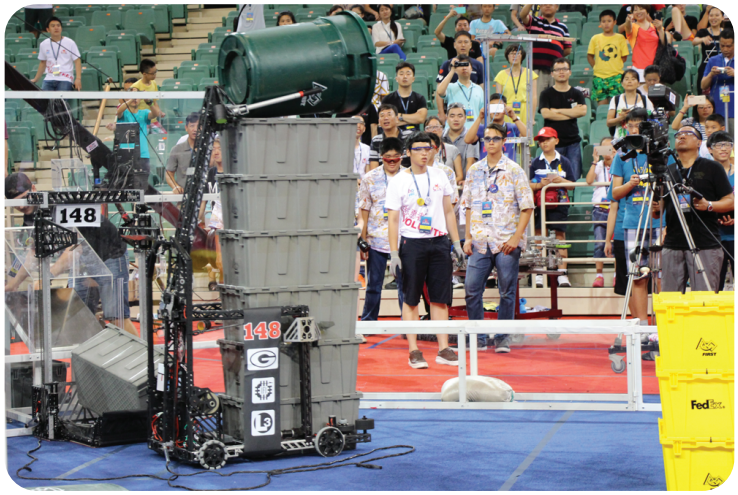

Chinese Outreach

This past March, three of the Chinese teams that we mentored (Teams 5297, 5307, and 5820) traveled all the way to Texas to compete in the Dallas Regional! They arrived 3 days early so that they could come visit us at our school, in Greenville. While they were here, we were ecstatic to show the teams the same hospitality that we received from them just months earlier. During their time in Texas, we held multiple workshops with the Chinese teams, and also gave them a taste of the American culture by letting them sit-in on some of our school's classes, touring the University of Texas at Dallas, and of course, Mexican food.


HERALD BANN
HUNT COUNTY'S OLDEST BUSINESS | REPORTING THE FRE
CATCH OR NOT?
NFL OFFICIALS TRYING TO CLARIFY RULE | PAGE A9
EXECUTI
WARD ATTORNEYS CLAIM CLIE
TUESDAY, MARCH 22, 2016
Online at HeraldBanner.com
BRAD KELLER / HERALD-BANNER
The Greenville High School Robowranglers Team 148 is hosting a robotics team from Guangzhou, China for two days of workshops and testing on their respective robots.
SPEAKING LANGUAGE OF ROBOTS
GHS Robowranglers host team from China
The Greenville High School Robowranglers Team 148 is hosting its counterpart squad from Guangzhou, China for two days of
Urban Youth Robotics Alliance to compete in the China Robotics Challenge
international Bracket, where they won first

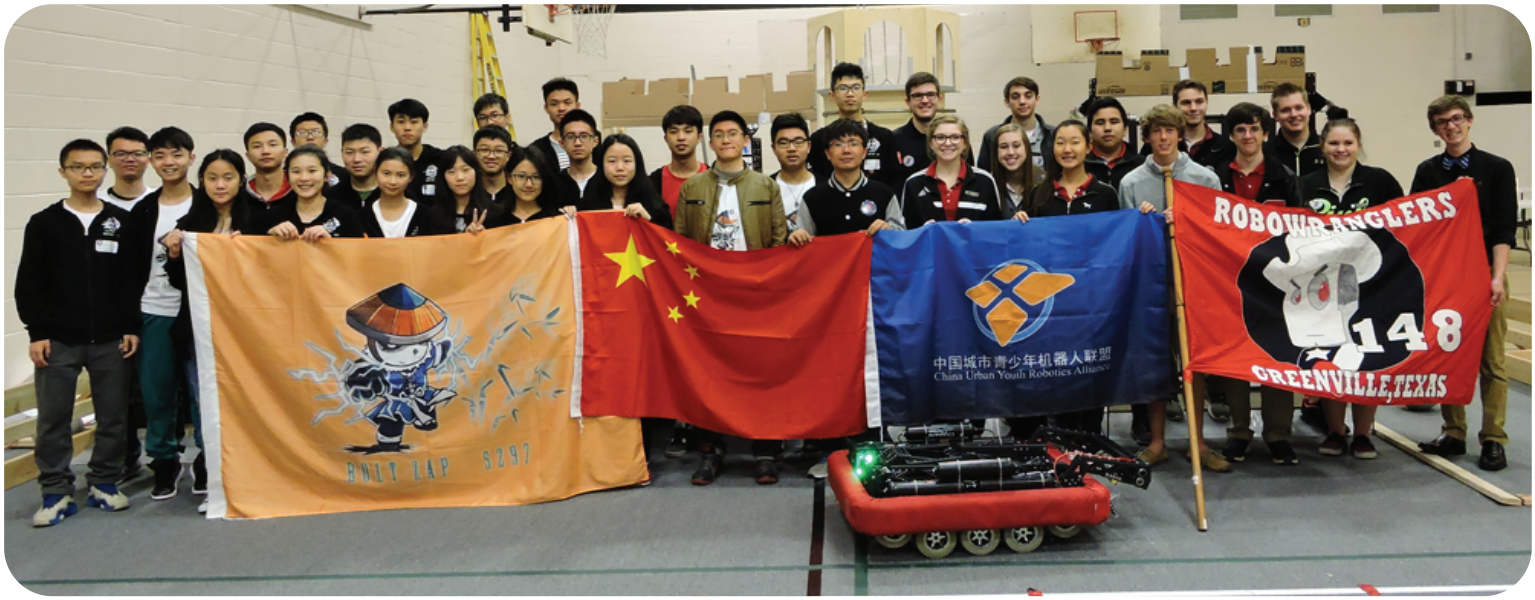

Design Process

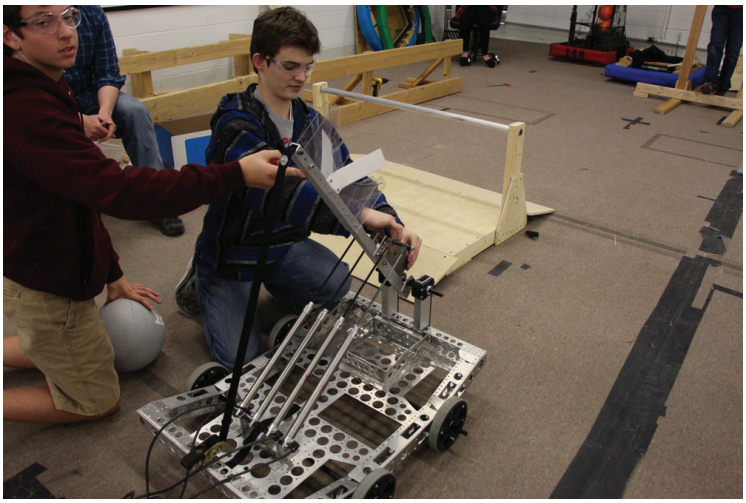

Design is an iterative process. Every Robowrangler has heard these words countless times, and it has become a mantra on Team 148. We celebrate failure, for failure brings us to create bigger and better ideas and designs. We want to fail quickly and often to find the most effective way to play this year's FRC game, Stronghold.

Following our successful design strategy from last year, we decided to spend a large majority of this season completely dedicated to prototyping and quick iteration.

Due to the complexity of this year's game, the team spent quite a bit longer than usual designing a shooter and drivetrain that would meet our needs and standards.

After a few days of debating early in the season, we came to the easy conclusion that our robot should be able to fit under the low bar. This was based on the fact that it is the one defense we know will always be on the field, and that it guarantees our alliance 25% of an important breach. We also had to ensure that our drivetrain would be robust enough to quickly and consistently cross EVERY other defense. After designing no less than 6 unique shooter prototypes, the team narrowed it's focus onto the two we felt had the most potential to be successful. From there, our design team began coming up with different concepts that integrate these designs with our pre-set requirement of being able to fit under the low bar.

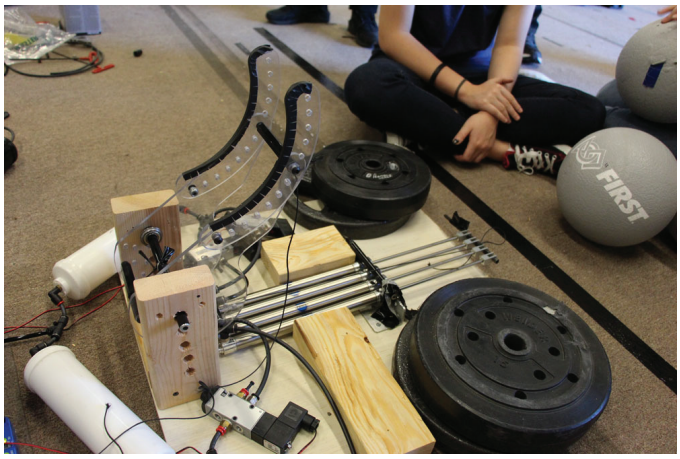

While the design team was creating these concepts, the rest of the team split into groups based on subsystems. Even though we didn't know exactly what the design team would come back with, we knew we would need some form of an intake and a hanging mechanism. Each group started with several prototypes, each one going through several tests and iterations to find the best solution. If these tests were successful, we put them up for consideration for the final robot. Of course, most were not as successful as planned. However, based on the most successful prototypes, we came together at the end of Week 3 (in a two hour long meeting) and decided as a team what our robot would look like. At this point, a team of students and mentors used computer aided design (CAD) software to design the sheet metal for our robot.

Once we finished CAD and had sheet metal back from our sponsor's metal stamping shop, we began assembly of both our practice robot and competition robot. By building a separate practice robot that we keep in our shop, we are able to continue the design process in between competitions.

After assembly is complete, we test the robot as a whole. If the team discovers issues or possible improvements, we revisit the intial designs. You can see the applied iteration first hand through the constant evolution of our robot each season.

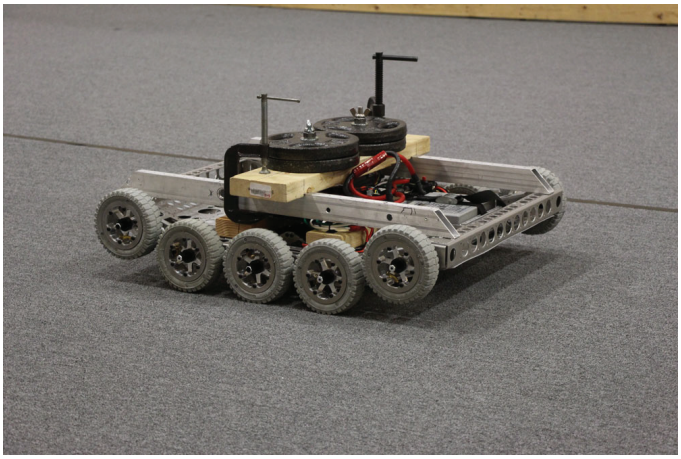

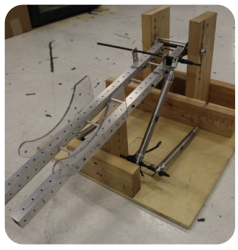
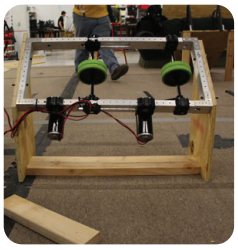
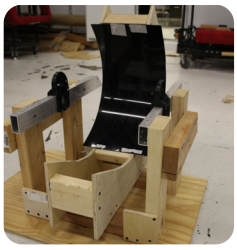
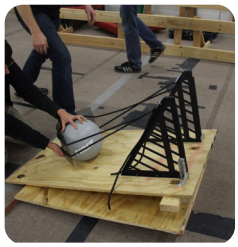
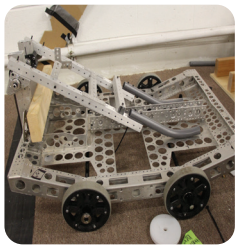
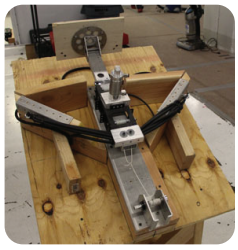

Initial Prototypes: When we began prototyping our shooter for this season, we quickly came up with 6 unique designs mainly made out of wood and other materials laying around our shop. These included a pneumatic catapult, a dual wheeled shooter, a hooded flywheel, a slingshot, a mechanical catapult, and a linear accelerating puncher.

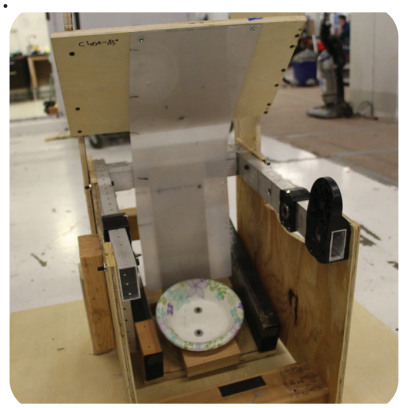
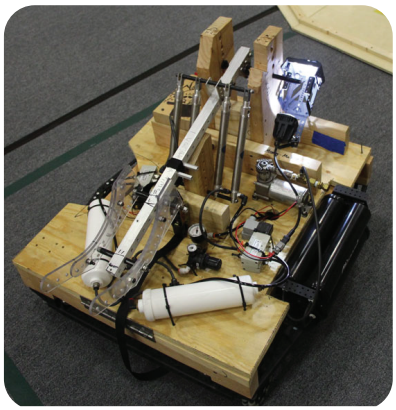

Simplicity Is Key: Soon after we made the initial prototypes, we realized that it would be extremely difficult to package most of our designs into a robot that would fit under the low bar. So, we eliminated those designs, and refined the prototypes we felt were more manageable. After rigorous testing of each prototype, the team concluded that a pneumatic catapult, and a hooded flywheel were the two designs that best fit our needs. After iterating each design yet again, the team put each design through a series additional tests to determine which would be the most consistent.

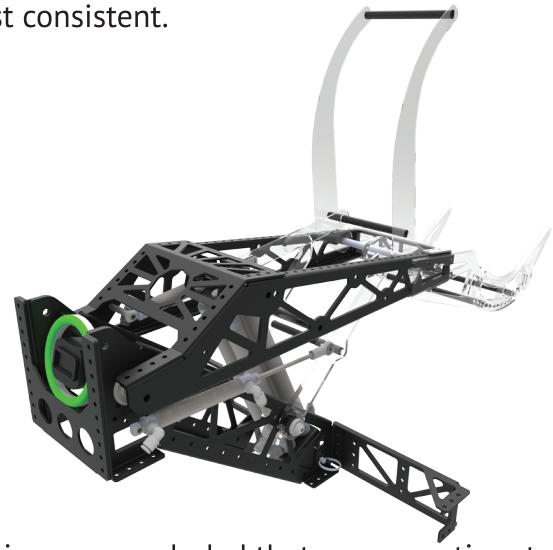

Final Design: After testing each design, we concluded that a pneumatic catapult would be our most efficient option. A catapult minimizes the effect of ball variance, while also giving us the ability to create a mechanical hard-stop. This allows us to have both a long and short ranged shot, and also eliminates the time wasted waiting on a flywheel to spin up to a desired launching speed.

Drivetrain

The side pontoons of our drivetrain are a custom 'banana' like shape that allows us to approach and transition over defenses with ease. The chain-in-tube design makes chain a low service item with maximum reliability. Our 6" pneumatic wheels allows us to absorb most of the shock associated with driving over uneven terrain.

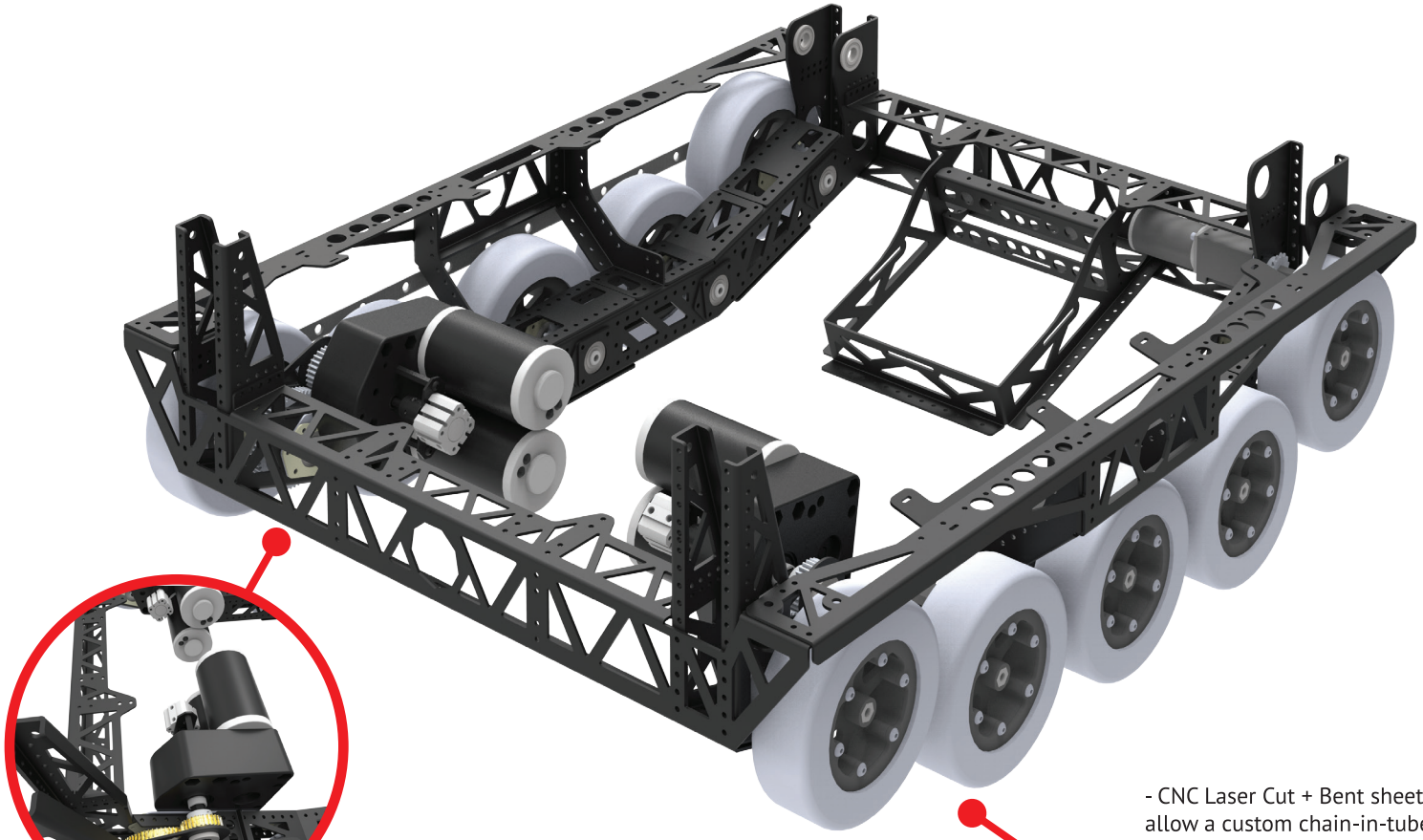

- Integrated final stage of gearbox allows quick serviceability of the most stressed gears in the drivetrain or if there is a gearbox failure, a quick swap of the entire mechanism.

- CNC Laser Cut + Bent sheetmetal allow a custom chain-in-tube shape with lifted end wheels.

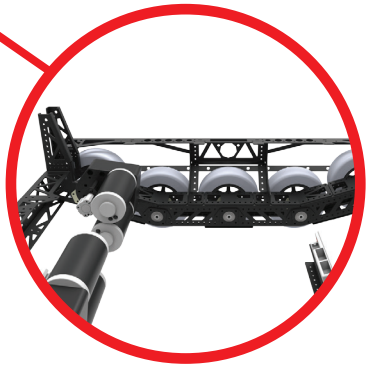

Intake

"Smooth is fast." The single roller intake allows us to intake all the way through, from the floor to the catapult or pick up and hold the ball for a low goal or handoff to the catapult without losing control of the ball. The hooks at the front allow the intake to raise the Portcullis, and also lower the Cheval de Frise with the bottom edges.

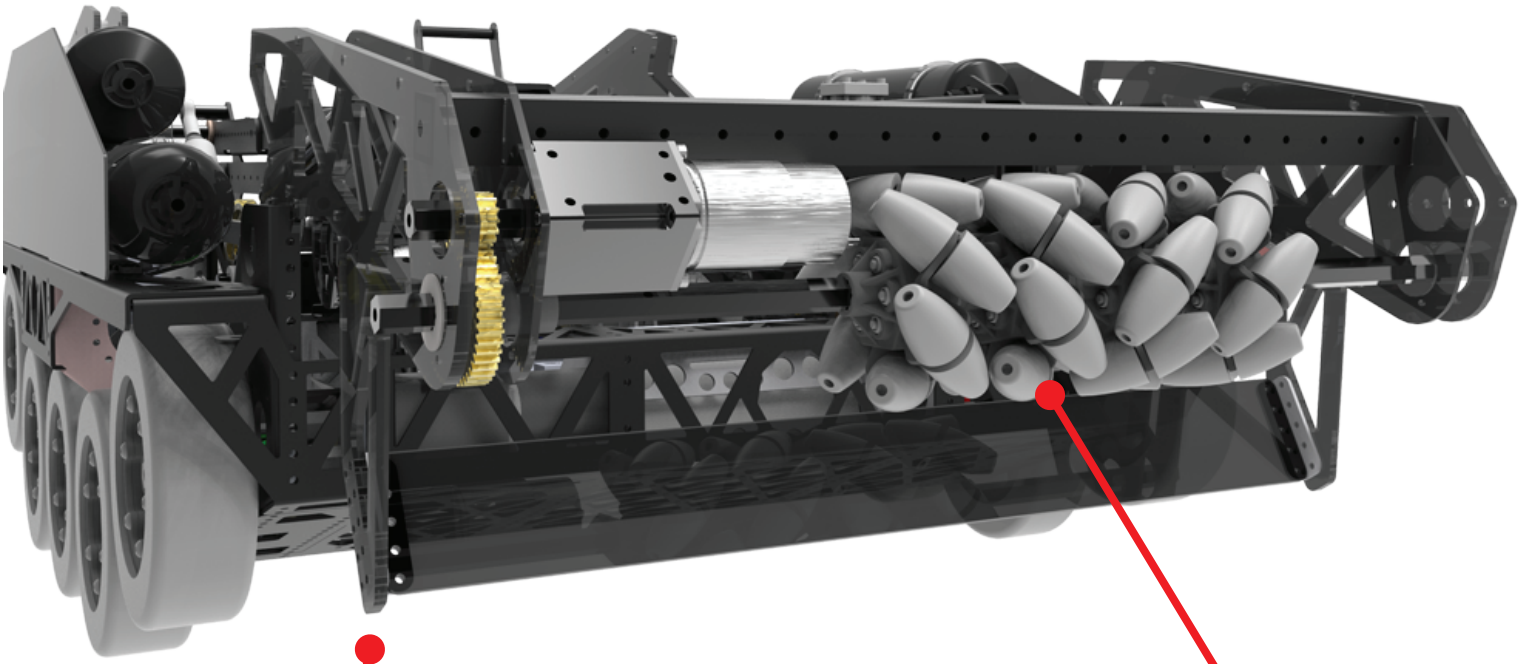

- Allows Ball to Roll all the way through or pick up into flap and handoff
- Allows removal of ball

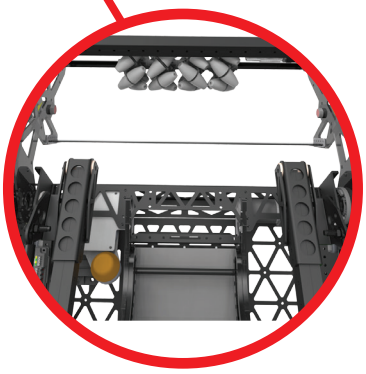

- Simple single roller allows a large intake effective area

Pneumatapult

- The catapult arm is a custom geometry to 'get around' the hanger as well as allowing us to add strength where we need it (around the pivot and power pack). The lexan cradle at the back has a 'Vernier pattern' like hole pattern that allows super fine adjustment.

- These hooks turns a two position mechanism of the catapult into a three position mechanism. Our short shot allows us to shoot from the nose of the batter all the way out by two robot lengths for heavy defensive play.

- The pneumatapult integrates a vision tracker to allow us to track the high goal in autonomous.

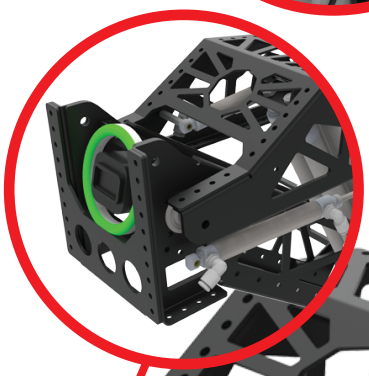

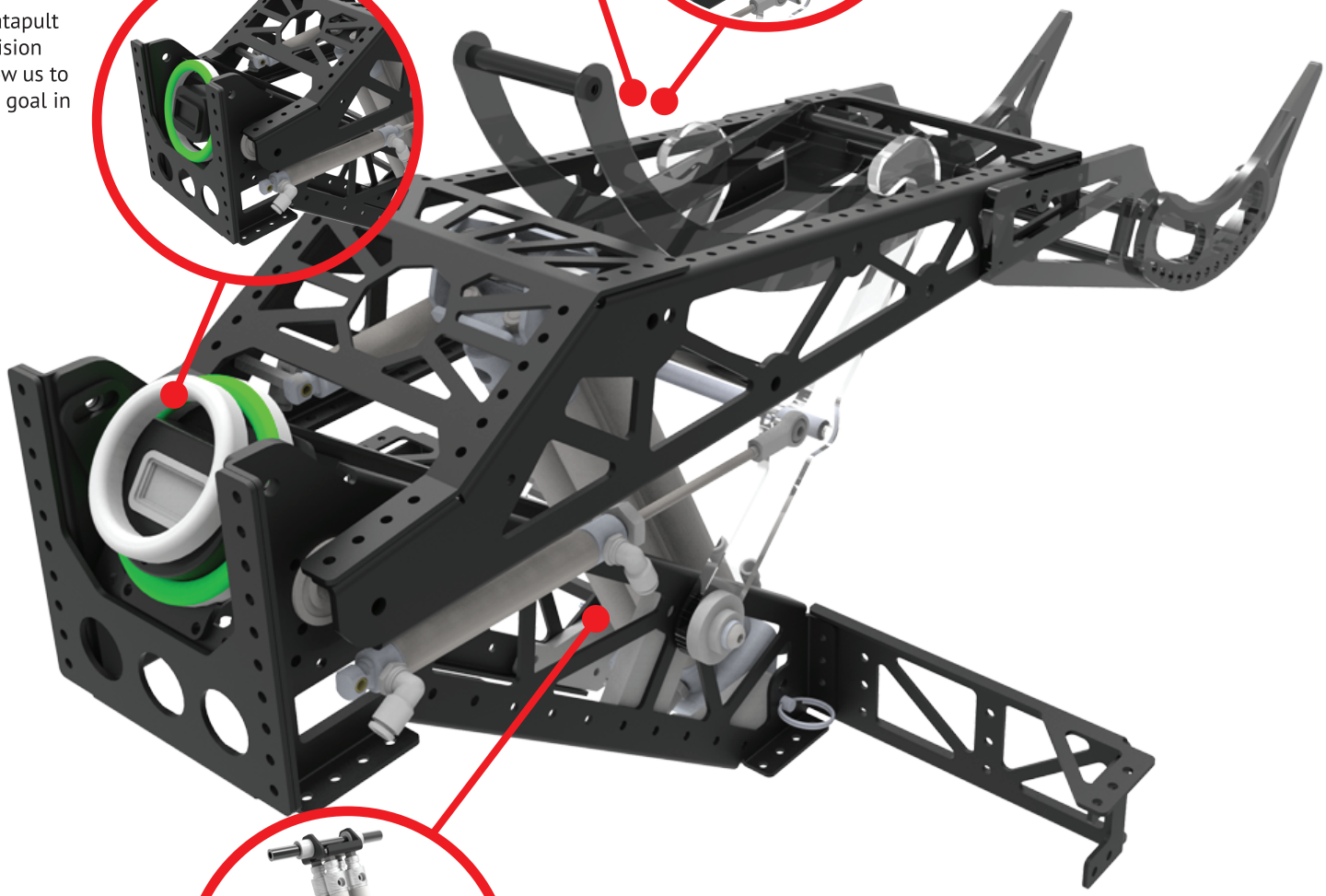

- The 'power pack' is a quickly changeable bank of pneumatic cylinders coupled with 'high flow' solenoids that allows us a quick powerful shot while minimizing working pressure.

Hanger

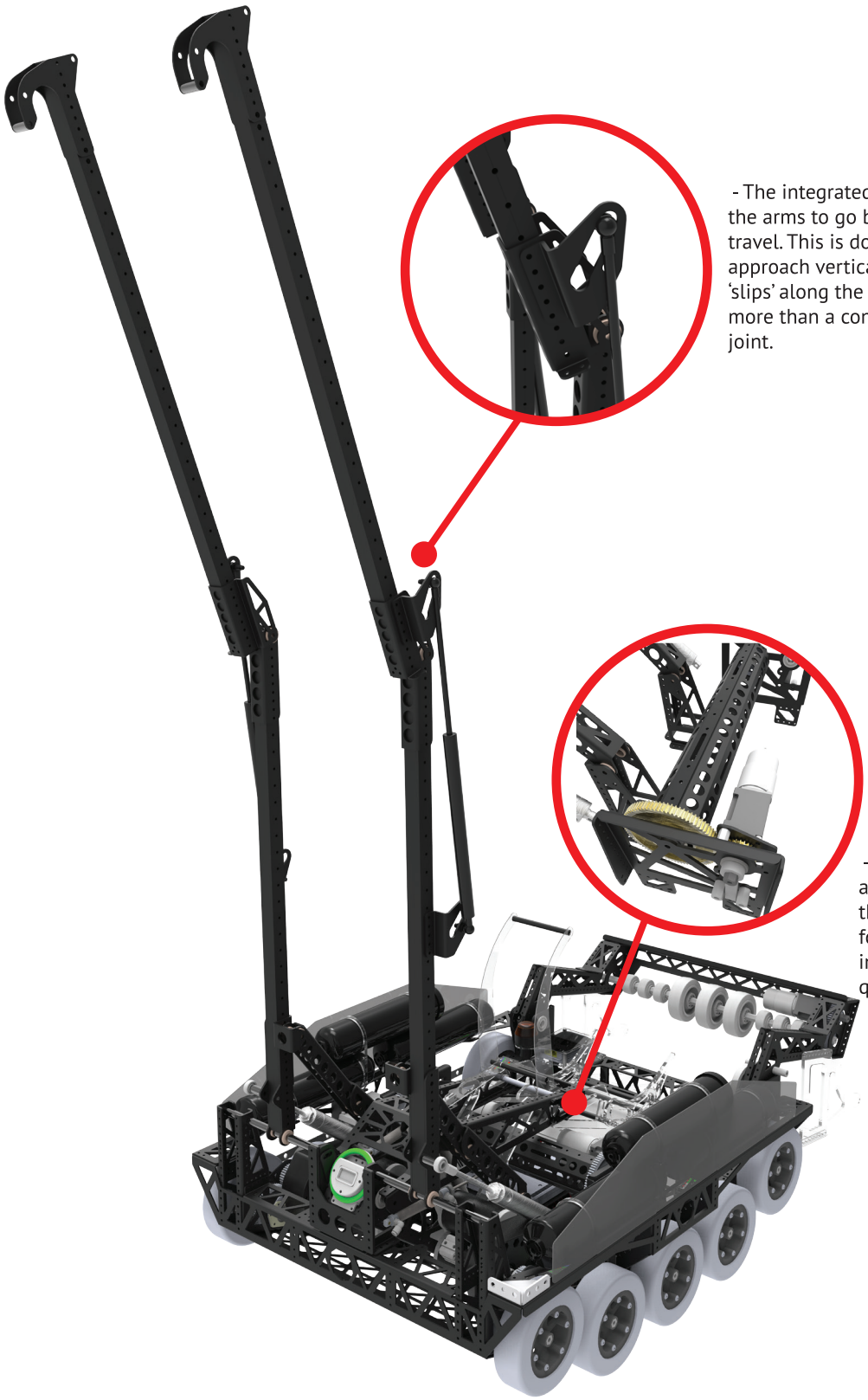

- The integrated cam track allows the arms to go beyond 180* of travel. This is done as the arms approach vertical, the gas piston 'slips' along the cam track to travel more than a conventional simple joint.

- Custom sheetmetal nonagon allows a light tube to synchronize the retraction of the winch straps for a nice, even hang. The tube also integrates the final gearing allowing quick removal and easy servicing.

Action Arms

The action arms help the drivers passively drive through the Cheval de Frise and Portcullis. A simple wedge geometry in the intermediate position pushes the 'Chevals' underneath the bumpers and into the drivetrain for a continous drive through. Put the action arms all the way down, and the wedge pushes the Portcullis up for a smooth transition.

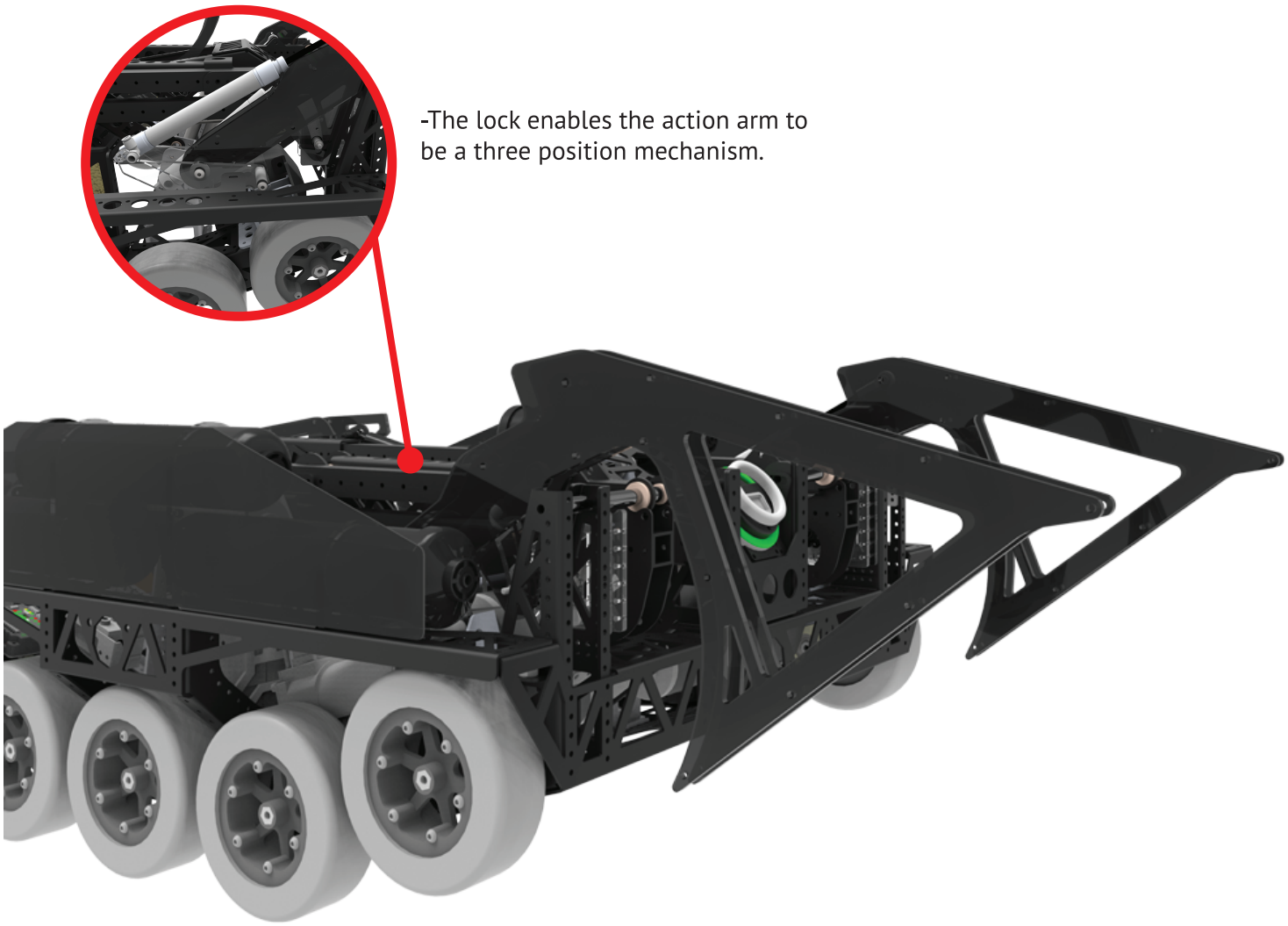

Programming

- Uses the camera to find how many degrees we are off from the center of the goal, and auto-correct in autonomous mode

- Intake integrates an IR beam break sensor to stop intaking when a boulder is secured

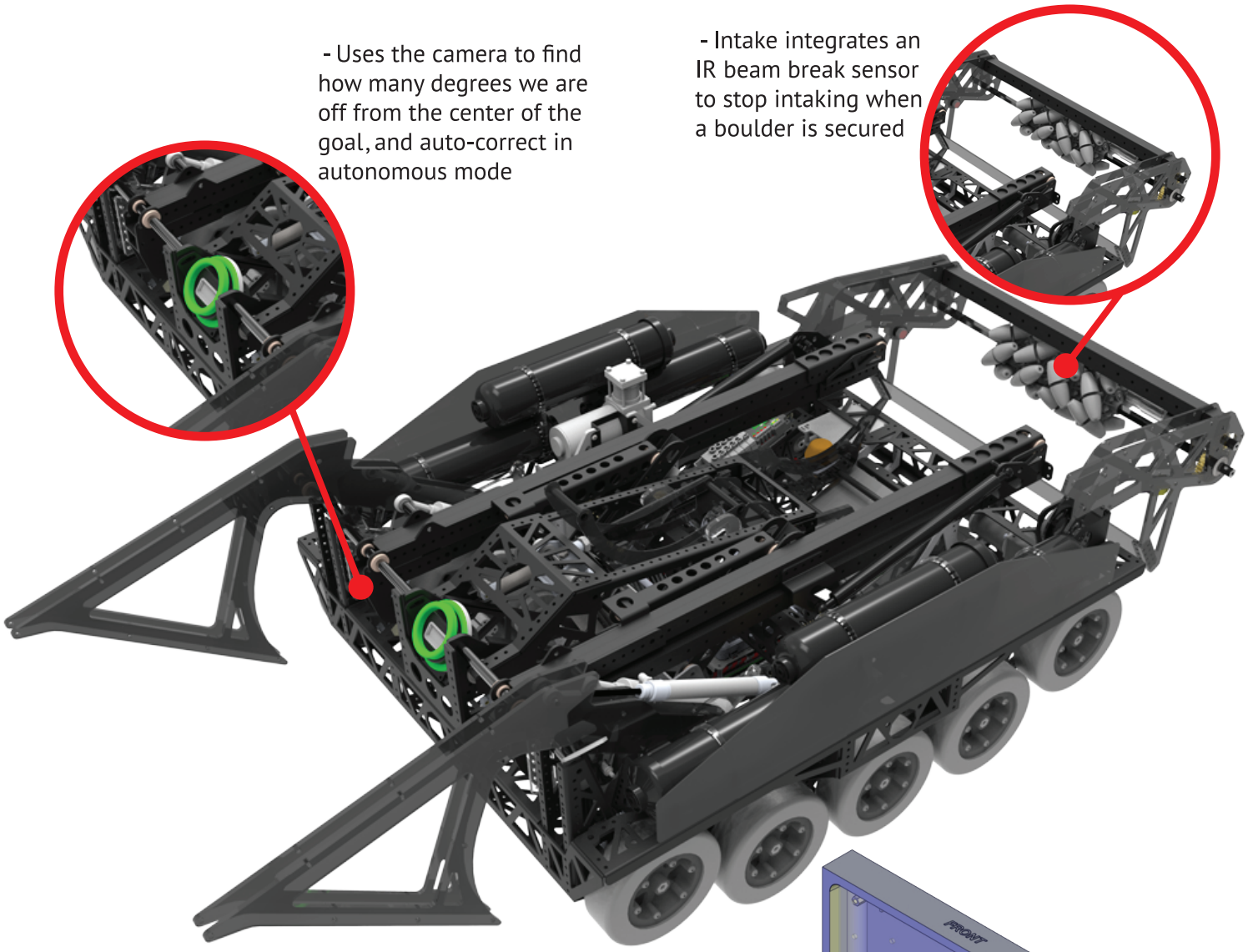

DRIVER STATION

- 30 Unique autonomous segments for 130 autonomous combinations
- Integrated FMS cable routing
- Storage for driver controllers and Laptop AC Adapter

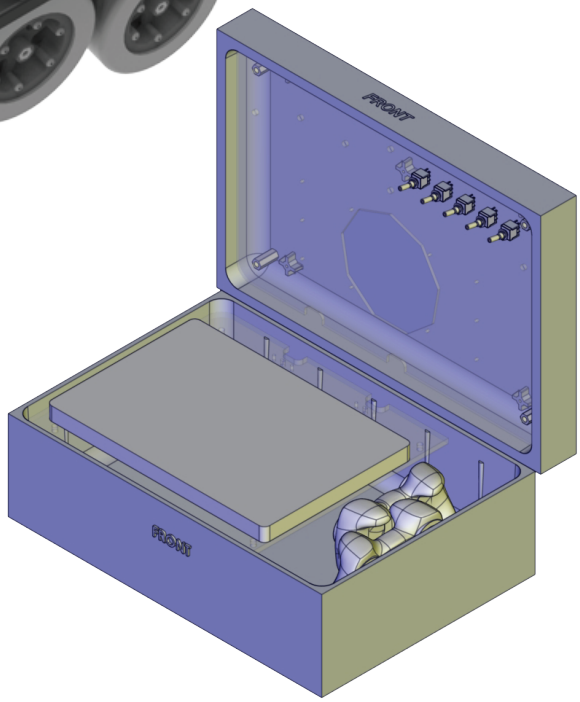

Sub-teams

Drive Team

The Drive Team is made up of four people. We have a driver, operator, human player and a drive coach. The responsibility of the Drive Team is to operate the robot during a match. It is crucial to our team that these people are the best at what they do.

Media Team

The Media Team is in charge of documenting everything we do at events. Keeping up with the social media and taking pictures are just some of their tasks. Our team uses competition footage to help our team stay up to date between every event.

Pit Crew

Our Pit Crew plays a key role in the functionality of our robot at competition. They are constantly adjusting and repairing, depending on our robot's needs to ensure that it operates to the full potential every match.

Ninja Crew

Our Ninja Crew plays a vital role at competition. If we see another team in need, we offer our resources and man power to assist in fixing their robot. It is one of our goals to help as many teams as we can at competitions.

Scout Team

Our scout team is steadily working during build season and at competitions to help our team determine what kind of robots we are with during qualification matches and what robots we would like to pair with in the elimination matches.

Sponsors

Greenville ISD

Greenville ISD, which encompasses the city of Greenville, Texas and the surrounding five to seven-mile radius, is a school district that has something to offer for just about everyone. Large enough to offer progressive programsv yet small enough to allow teachers the chance to cultivate a personal, active interest in each student, Greenville ISD encourages students to seek enrichment while also reaching out to those with unique learning needs. Greenville ISD, in keeping with its mission statement, "prepares, inspires, and empowers students in a safe and nurturing environment to become responsible citizens who successfully compete in a global society."

Innovation First International

Innovation First International (IFI) began by producing electronics for autonomous mobile ground robots, and is now a leader in educational and competitive robotics products, and a growing developer of consumer robotics toys. Incorporated in 1996, Innovation First International is a privately held corporation that was founded on the belief that innovation is necessary very early in the design process to produce simple and elegant product designs. Though they are now also known for producing the HEXBUG line of toys, IFI initially gained recognition as the creators of the VEX Robotics Design System. They also produced the control system used in FRC events until 2008. IFI is our largest sponsor; they employ many of the engineers that serve as team mentors, and their industrial sheet metal manufacturing capabilities help our robots maintain an iconic presence on and off the field.

L-3 Mission Integration

L-3 is a prime contractor in Command, Control, Communications, Intelligence, Surveillance and Reconnaissance (C3ISR) systems, aircraft modernization and maintenance, and government services. L-3 is also a leading provider of a broad range of electronic systems used on military and commercial platforms. Their customers include the U.S. Department of Defense and its prime contractors, U.S. Government intelligence agencies, the U.S. Department of Homeland Security, U.S. Department of State, U.S. Department of Justice, allied foreign governments, domestic and foreign commercial customers and select other U.S. federal, state and local government agencies.

ROBOWRANGLERS

EST. 1992

SIXTEEN REGIONAL WINS

2 REGIONAL WOODIE FLOWERS

Three DIVISION WINS

ONE REGIONAL CHAIRMAN'S

2 CHAMPION CHAIRMAN'S FINALISTS

29 TECHNICAL AWARDS

5 REGIONAL FINALISTS

ONE DIVISION FINALIST

2 WORLD CHAMPIONSHIP TITLES

ROBOWRANGLERS148.com